❖

GTCAP
GTCAP
GTCAP

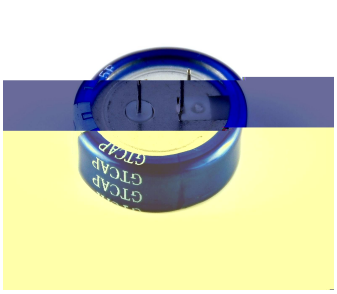
GTCAP
GTCAP
GTCAP

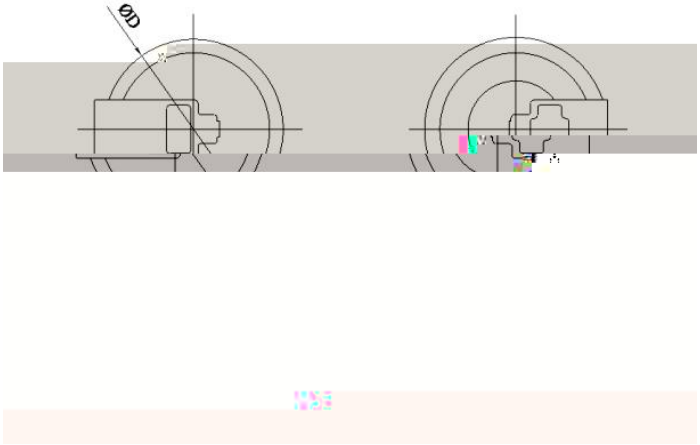
ØD

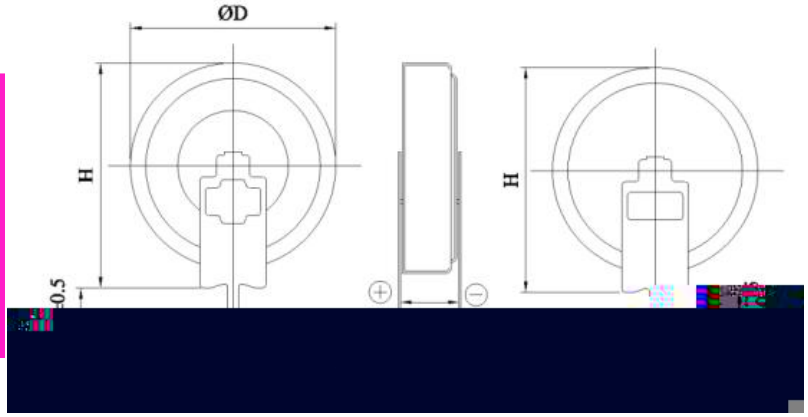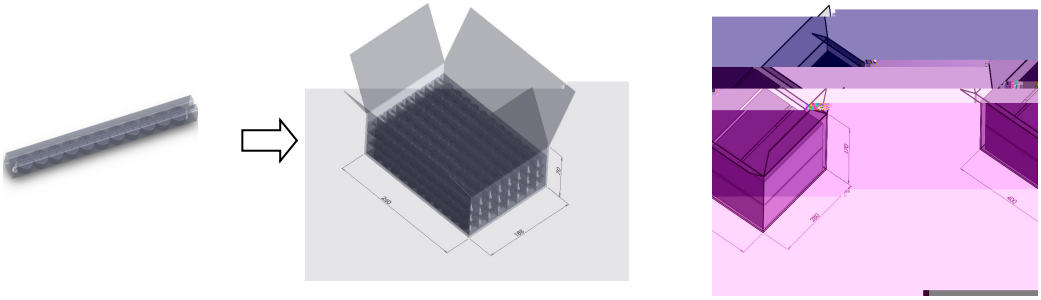
ØD
H
H
0.5